NEED ○	·	PURCHASING SPECIFICATION	·	REQUEST FOR APPROVAL	·	DELIVERY DRAWING	·	INSPECTING STANDARD	·	QC-PROCESS

3RD ANGLE PROJECTION

GEN. TOL. 一般公差			
DRAFT ANG. 鋳抜勾配	OUTSIDE	INSIDE
	2/100	3/100
	3/100	

CAST WALL THICK. 鋳肉厚	NOMINAL DIM. DIVISION	5 MAX	5 TO :10	10 TO :18	18 TO :30	30 TO :50
	SANDMOLD	±1.0	±1.5	±2.0	±3.0	±3.5
	SHELL	±0.8	±1.0	±1.5	±2.0	±2.0

L.-CAST 鋳肉長さ	120 MAX	120 TO :250	250 TO :400	400 TO :800	800 TO :1600	1600 TO :3150
	±1.5	±2.0	±3.0	±4.0	±5.0	±7.0
	±1.0	±1.5	±2.0	±3.0	±4.0	±6.0

L.-CHIP 削り					
	0.5 TO : 6	±0.1	400 TO :1000	±0.8
	6 TO : 30	±0.2	1000 TO :2000	±1.2
	30 TO :120	±0.3	2000 TO :4000	±2.0
	120 TO :400	±0.5		

ANG. CHIP 角度削り	
10 MAX	±1DEG.
10 TO : 50	±30MIN.
50 TO :120	±20MIN.
120 TO :400	±10MIN.
400 MIN	± 5MIN.

FIGURE DIMENSION | GT.CODE

○ AND ⌀:RADIAL

C A R E E R

(2010.08.31)量産用として図面新製する。
RELEASE OF DRAWING FOR MASS PRODUCTION.
(YDSBD-10005)(宮島)

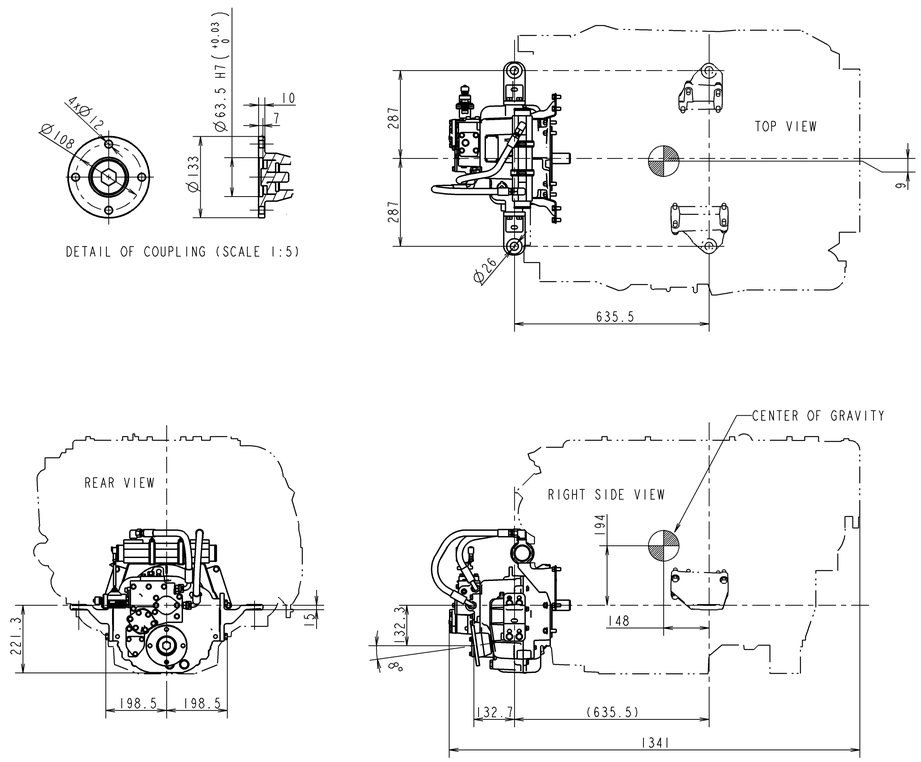

KMH50A MARINE GEAR

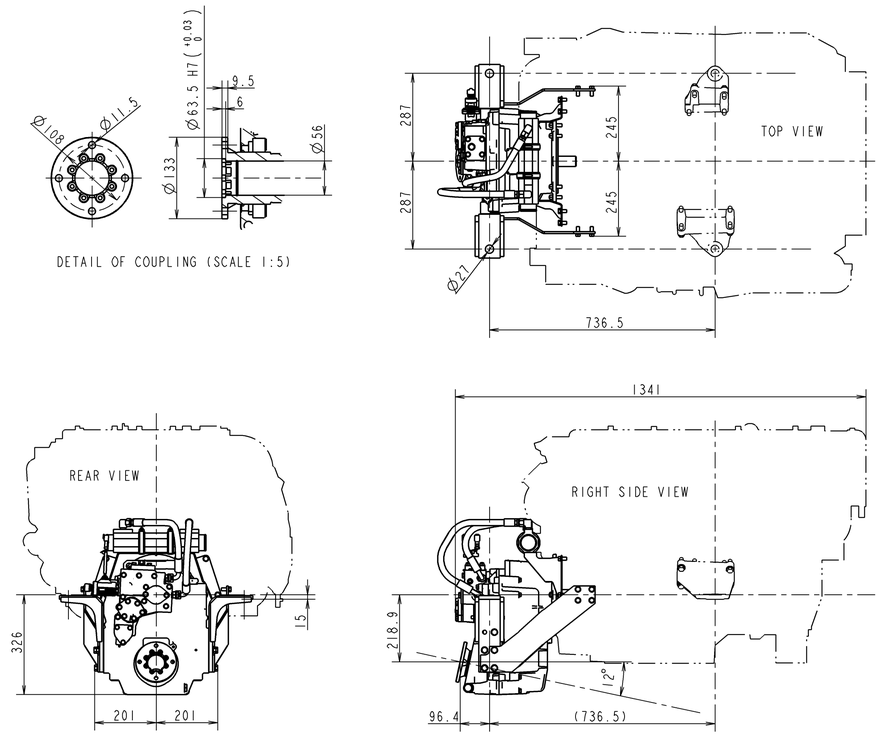

KMH52V MARINE GEAR

NOTES.
1. REFER TO "B2-19798-0010" DRAWING FOR DETAIL OF ENGINE.

CAD DATA INFORMATION OF THIS DRAWING.

CAD SYSTEM	Pro/Engineer Wildfire2.0
ARCHIVE FILE NAME	b2-19798-0020_rev0.zip
FILE ARCHIVER	ZIP
DATA TRANSLATION FORMAT	IGES

GEAR MODEL	REDUCTION				DRY WEIGHT WITH ENGINE, kg	DIRECTION OF ROTATION (AT OUTPUT COUPLING)
KMH50A	-	1.67	2.13	2.43	492	BOTH
KMH52V	1.22	1.58	2.08	2.47	-	

With respect to the use of environmentally hazardous substances for the parts, the substances in use shall conform to the requirement specified in TIS V-0001J, "Restrictions of use for Environmentally Hazardous Substances".

本部品の環境有害物質の使用に関しては、YIS V-0001J(環境有害物質の使用制限)を満足すること。

3D-CAD

NOTICE

GEOMETRICAL TOLERANCE	
KIND OF TOLERANCE	SYMBOL
FORM: STRAIGHTNESS TOLERANCE	—
FORM: CIRCULARITY TOLERANCE	○
FORM: PROFILE OF LINE TOLERANCE	⌒
FORM: FLATNESS TOLERANCE	⏥
FORM: CYLINDRICITY TOLERANCE	⌭
FORM: PROFILE TOLERANCE OF SURFACE	⌓
ORIENTATION: PARALLELISM TOLERANCE	//
ORIENTATION: PERPENDICULARITY TOLERANCE	⊥
ORIENTATION: ANGULARITY TOLERANCE	∠
LOCATION: POSITIONAL TOLERANCE	⌖
LOCATION: COAXIALITY OR CONCENTRICITY TOLERANCE	◎
LOCATION: SYMMETRY TOLERANCE	⌯
RUN-OUT: CIRCULAR RUN-OUT TOLERANCE	↗
RUN-OUT: TOTAL RUN-OUT TOLERANCE	⌰

MASS,RAW	kg (± %)							開発部	MANAGER 梶
MASS,CALC.	kg (± %)								
SEN.ENGINEER 伊藤	SEC.MANAGER 荻沢	MODEL	8LV 320	8LV 350	8LV 370			SCALE	1:10
CHECKED 志賀	SPECIALIST 西條	QTY						MATERIAL	
		8LV アプリケーション							
DESIGNED 宮島	DRAWN	DATE:Y.M.D 2009.11.13	NAME	8LV APPLICATION (1/2) OUTLINE DRAWING FOR OPTIONAL PARTS					

YANMAR
YANMAR CO.,LTD. DEVELOPMENT DEPT.

CODE B2-19798-0020 | DRAW SIZE A1